HEAVY-DUTY VERTICAL CLAMPS

VA300 SERIES
MODEL **VA300/2B**

for pneumatic models see page 14

Arm:
The spindle is adjustable along the arm.

Base:
Flanged.

Nominal Holding Force:
300 daN

Weight:
0.25 Kg

Supplied complete with:
MB0650 Set screw & nuts.
FW 06/12 Flanged washer.

See "Accessories" for other items.

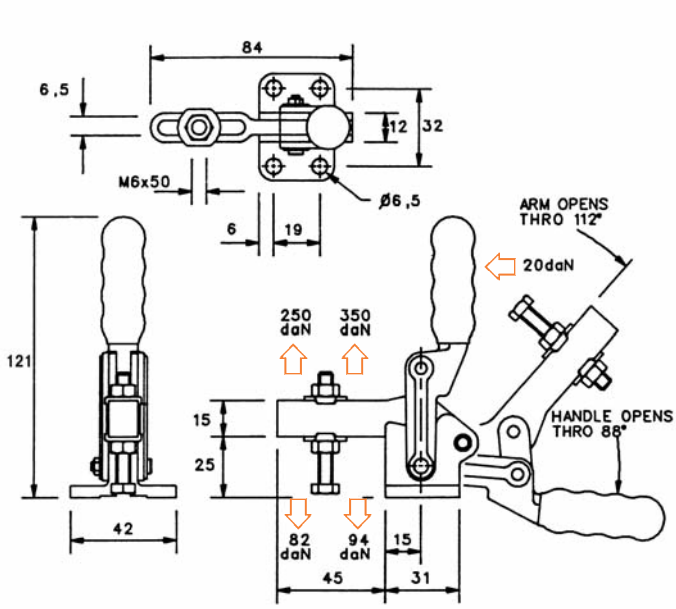

VA300 SERIES
MODEL **VA300/2BT**

for pneumatic models see page 14

Arm:
The spindle is adjustable along the arm.

Base:
Flanged.

Nominal Holding Force:
300 daN

Weight:
0.25 Kg

Supplied complete with:
MB0650 Set screw & nuts.
FW 06/12 Flanged washer.
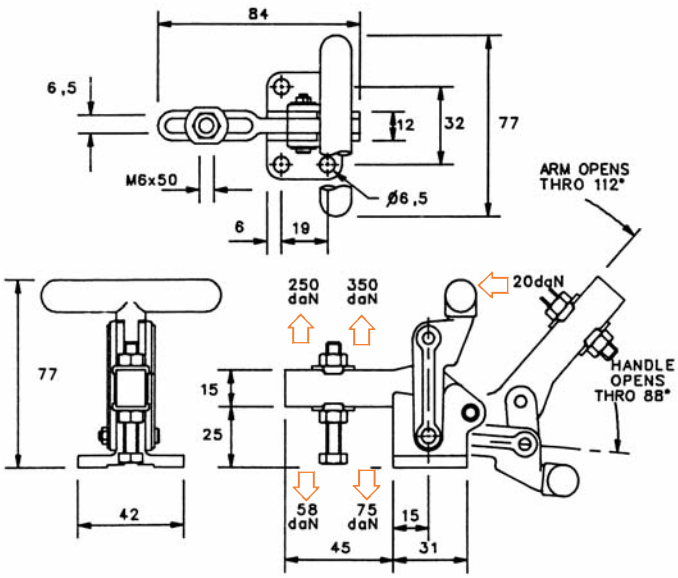
See "Accessories" for other items.